NOTES:
1. FOLD AND TAPE THE BOTTOM FLAPS OF THE CARTON.
2. INSERT THE PADS, BUBBLE AND PARTITIONS AS SHOWN.
3. FILL BAGS WITH CONNECTORS AND INSERT ONE BAG INTO EACH PARTITION CELL WITH ROUGHLY EQUAL NUMBERS PER BAG.(FOR 20582720** INSERT CONNECTORS INTO ONE BAG AND SEAL,THE QUANTITY PER BAG SHALL MATCH THE QTY/BAG IN THE TABLE. THEN PLACE ONE FILLED BAG INTO EACH CELL OF THE PARTITION.)
4. FOLD AND TAPE THE TOP FLAPS OF THE CARTON.
5. LABEL, THEN PALLETIZE AS SHOWN.
6. UNITIZE THE PALLET LOAD PER PK-47799-625 FOR SHIPPING.
7. FOR PART 0335361605, ONLY SHIP PRODUCT ON PALLETS IN FULL LAYER QUANTITIES. THE MINIMUM SHIPMENT CONTAINING 1 LAYER OF CARTONS FOR A TOTAL OF 24,000 PARTS, WITH A MAXIMUM OF 3 LAYERS OF CARTONS, WITH A TOTAL PART QTY OF 72,000 PARTS.

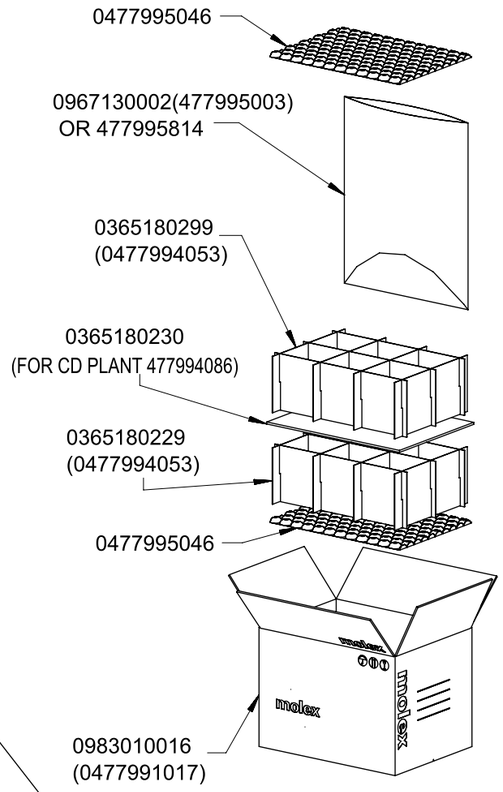

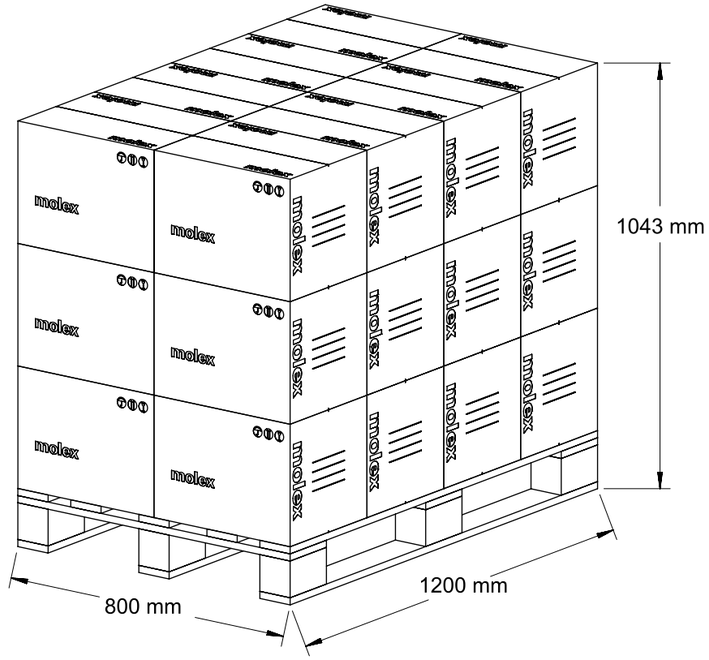

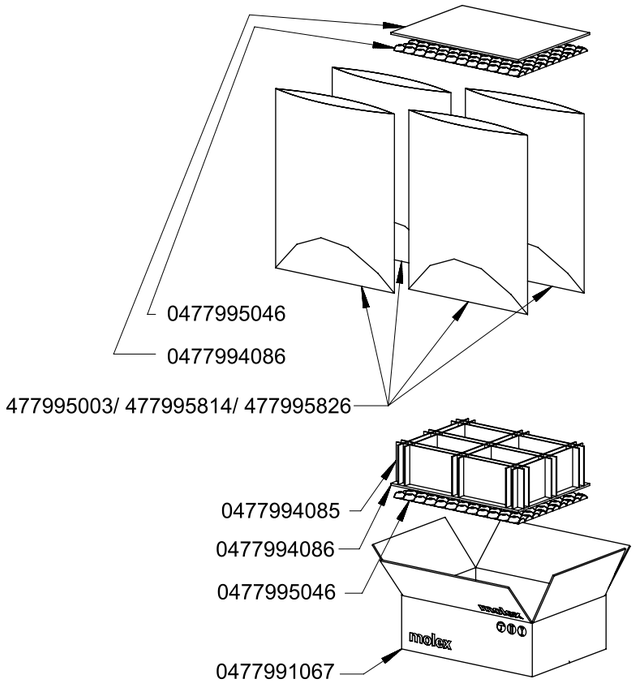

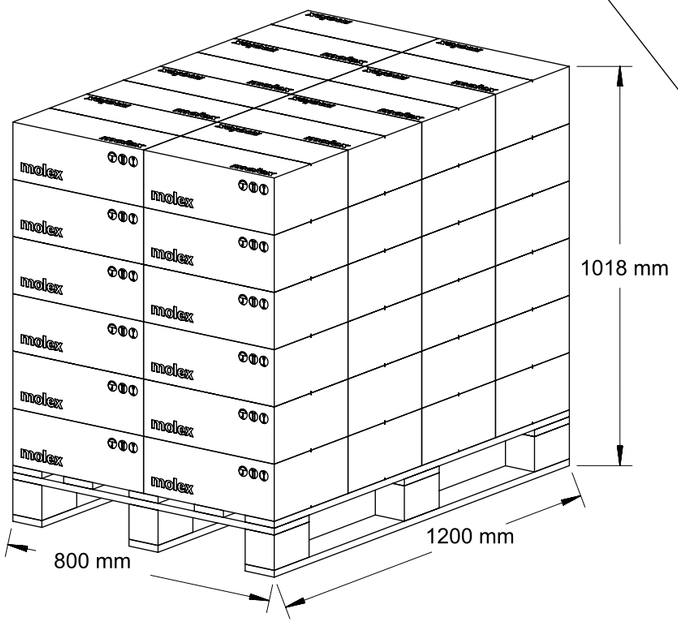

PRE-RELEASE REFERENCE USE ONLY

FUNCTIONAL SYMBOLS	THIS DRAWING CONTAINS INFORMATION THAT IS PROPRIETARY TO MOLEX ELECTRONIC TECHNOLOGIES, LLC AND SHOULD NOT BE USED WITHOUT WRITTEN PERMISSION		
FA = 0	DIMENSION UNITS: MM	SCALE: 1:1	CURRENT REV DESC: UPDATE PACKAGING
FC = 0	GENERAL TOLERANCES (UNLESS SPECIFIED)		
FP = 0	ANGULAR TOL ± 1°		
	4 PLACES ±		
DIVISIONAL SYMBOLS	3 PLACES ±		STATUS:
	2 PLACES ± 0.130		DRWN:
	1 PLACE ± 0.25		CHK'D:
	0 PLACES ±		APPR:
	DRAFT WHERE APPLICABLE MUST REMAIN WITHIN DIMENSIONS		THIRD ANGLE PROJECTION

DRAWING: A3-SIZE
SERIES: 31300

molex

BULK PACK FOR MINI50
ADD NEW PAD NUMBER

PRODUCT DESIGN DRAWING

DOCUMENT NUMBER	DOC TYPE	DOC PART	REVISION
PK-31301-538	PDD	001	L

MATERIAL NUMBER	CUSTOMER	SHEET NUMBER
SEE TABLE	GENERAL MARKET	1 OF 5

FORMAT: TC-4100-A3
REVISION: B
DATE: 2022/08/01

	PRODUCT MAT'L #	PRODUCT DESCRIPTION	SPQ	CARTON MAT'L #	BAG MAT'L # Manual	BAG MAT'L # Automatic	BAGS/ CARTON	PARTITION MAT'L #	PARTITIONS /CARTON	BUBBLE MAT'L #	BUBBLE/ CARTON	PAD MAT'L #	PADS/ CARTON
H1	335361605	MX150 SEALED, 16 WAY HYBRID RCPT, 2 ROW GROMMET CAP *SEE NOTE 7*	2512	309072080	967130037		1						1
	206523012*	MINI50 GEN II 12CKT RCPT W/O CPA	720	477991067	477995003		4	477994085	1	477995046	2	477994086	2
	206523212*	MINI50 GEN II 12CKT RCPT W/ CPA	720	477991067	477995814		4	477994085	1	477995046	2	477994086	2
	206523024*	MINI50 GEN II 24CKT RCPT W/O CPA	1,920	477991017	477995003		12	477994053	2	477995046	2	477994086	1
	206523224*	MINI50 GEN II 24CKT RCPT W/ CPA	1,920	477991017	477995814		12	477994053	2	477995046	2	477994086	1
	206523016*	MINI50 GEN II 16CKT RCPT W/O CPA	500	477991067	477995003		4	477994085	1	477995046	2	477994086	2
	206523216*	MINI50 GEN II 16CKT RCPT W/ CPA	500	477991067	477995814		4	477994085	1	477995046	2	477994086	2
	206523020*	MINI50 GEN II 20CKT RCPT W/O CPA	400	477991067	477995003		4	477994085	1	477995046	2	477994086	2
	206523220*	MINI50 GEN II 20CKT RCPT W/ CPA	400	477991067	477995814		4	477994085	1	477995046	2	477994086	2
	2075840121	MINI50 GEN II 12CKT RECPT KEY A W/O CPA	720	477991067	477995003		4	477994085	1	477995046	2	477994086	2
	2075840122	MINI50 GEN II 12CKT RECPT KEY B W/O CPA	720	477991067	477995003		4	477994085	1	477995046	2	477994086	2
	2075840123	MINI50 GEN II 12CKT RECPT KEY C W/O CPA	720	477991067	477995003		4	477994085	1	477995046	2	477994086	2
	2075842121	MINI50 GEN II 12CKT RECPT KEY A W/CPA	720	477991067	477995814		4	477994085	1	477995046	2	477994086	2
	2075842122	MINI50 GEN II 12CKT RECPT KEY B W/CPA	720	477991067	477995814		4	477994085	1	477995046	2	477994086	2
	2075842123	MINI50 GEN II 12CKT RECPT KEY C W/CPA	720	477991067	477995814		4	477994085	1	477995046	2	477994086	2
	2075840161	MINI50 GEN II 16CKT RECPT KEY A W/O CPA	500	477991067	477995003		4	477994085	1	477995046	2	477994086	2
	2075840162	MINI50 GEN II 16CKT RECPT KEY B W/O CPA	500	477991067	477995003		4	477994085	1	477995046	2	477994086	2
	2075840163	MINI50 GEN II 16CKT RECPT KEY C W/O CPA	500	477991067	477995003		4	477994085	1	477995046	2	477994086	2
	2075842161	MINI50 GEN II 16CKT RECPT KEY A W/CPA	500	477991067	477995814		4	477994085	1	477995046	2	477994086	2
	2075842162	MINI50 GEN II 16CKT RECPT KEY B W/CPA	500	477991067	477995814		4	477994085	1	477995046	2	477994086	2
	2075842163	MINI50 GEN II 16CKT RECPT KEY C W/CPA	500	477991067	477995814		4	477994085	1	477995046	2	477994086	2
	2058272021	CONNTAK50 - 02CKT RCPT HSG TANG - POL A	2800	477991067	477995003		4	477994085	1	477995046	2	477994086	2
	2058272022	CONNTAK50 - 02CKT RCPT HSG TANG - POL B	2800	477991067	477995003		4	477994085	1	477995046	2	477994086	2
	2058272023	CONNTAK50 - 02CKT RCPT HSG TANG - POL C	2800	477991067	477995003		4	477994085	1	477995046	2	477994086	2
	2058272024	CONNTAK50 - 02CKT RCPT HSG TANG - POL D	2800	477991067	477995003		4	477994085	1	477995046	2	477994086	2
	2058272031	CONNTAK50 - 03CKT RCPT HSG TANG - POL A	2400	477991067	477995003		4	477994085	1	477995046	2	477994086	2
	2058272032	CONNTAK50 - 03CKT RCPT HSG TANG - POL B	2400	477991067	477995003		4	477994085	1	477995046	2	477994086	2
	2058272033	CONNTAK50 - 03CKT RCPT HSG TANG - POL C	2400	477991067	477995003		4	477994085	1	477995046	2	477994086	2
	2058272034	CONNTAK50 - 03CKT RCPT HSG TANG - POL D	2400	477991067	477995003		4	477994085	1	477995046	2	477994086	2
	2058272041	CONNTAK50 - 04CKT RCPT HSG TANG - POL A	2000	477991067	477995003		4	477994085	1	477995046	2	477994086	2
	2058272042	CONNTAK50 - 04CKT RCPT HSG TANG - POL B	2000	477991067	477995003		4	477994085	1	477995046	2	477994086	2
	2058272043	CONNTAK50 - 04CKT RCPT HSG TANG - POL C	2000	477991067	477995003		4	477994085	1	477995046	2	477994086	2
	2058272044	CONNTAK50 - 04CKT RCPT HSG TANG - POL D	2000	477991067	477995003		4	477994085	1	477995046	2	477994086	2
	2058272051	CONNTAK50 - 05CKT RCPT HSG TANG - POL A	1600	477991067	477995003		4	477994085	1	477995046	2	477994086	2
	2058272052	CONNTAK50 - 05CKT RCPT HSG TANG - POL B	1600	477991067	477995003		4	477994085	1	477995046	2	477994086	2
	2058272053	CONNTAK50 - 05CKT RCPT HSG TANG - POL C	1600	477991067	477995003		4	477994085	1	477995046	2	477994086	2
	2058272054	CONNTAK50 - 05CKT RCPT HSG TANG - POL D	1600	477991067	477995003		4	477994085	1	477995046	2	477994086	2
	2058272061	CONNTAK50 - 06CKT RCPT HSG TANG - POL A	1400	477991067	477995003		4	477994085	1	477995046	2	477994086	2
	2058272062	CONNTAK50 - 06CKT RCPT HSG TANG - POL B	1400	477991067	477995003		4	477994085	1	477995046	2	477994086	2
	2058272063	CONNTAK50 - 06CKT RCPT HSG TANG - POL C	1400	477991067	477995003		4	477994085	1	477995046	2	477994086	2
	2058272064	CONNTAK50 - 06CKT RCPT HSG TANG - POL D	1400	477991067	477995003		4	477994085	1	477995046	2	477994086	2
	349591340-5	34 WAY, 3 ROW RECEPTACLE	280	477991067	477995003	477995826	4	477994085	1	477995046	2	477994086	2
	349591380-5	MINI50 CONN RCPT 38CKT WITH CPA	280	477991067	477995003	477995826	4	477994085	1	477995046	2	477994086	2

PRE-RELEASE REFERENCE USE ONLY

THIS DRAWING CONTAINS INFORMATION THAT IS PROPRIETARY TO MOLEX ELECTRONIC TECHNOLOGIES, LLC AND SHOULD NOT BE USED WITHOUT WRITTEN PERMISSION

FUNCTIONAL SYMBOLS: FA = 0, FC = 0, FP = 0

DIVISIONAL SYMBOLS

DIMENSION UNITS	SCALE
MM	1:1

GENERAL TOLERANCES (UNLESS SPECIFIED)	
ANGULAR TOL	± 1°
4 PLACES	±
3 PLACES	±
2 PLACES	± 0.130
1 PLACE	± 0.25
0 PLACES	±

DRAFT WHERE APPLICABLE MUST REMAIN WITHIN DIMENSIONS

CURRENT REV DESC: UPDATE PACKAGING

STATUS:
DRWN:
CHK'D:
APPR:

THIRD ANGLE PROJECTION

DRAWING: A3-SIZE
SERIES: 31300

molex

BULK PACK FOR MINI50
ADD NEW PAD NUMBER

PRODUCT DESIGN DRAWING

DOCUMENT NUMBER	DOC TYPE	DOC PART	REVISION
PK-31301-538	PDD	001	L

MATERIAL NUMBER	CUSTOMER	SHEET NUMBER
SEE TABLE	GENERAL MARKET	2 OF 5

PART NUMBER	PART DESCRIPTION	CARTON	BAG	QTY/ BAG	BAGS/ CARTON	SPQ	CARTONS/ PALLET	QTY/ PALLET
2065230021	MINI50 GEN II 2CKT RECEPTACLE POL A	477991274	477995807	4000	2	8000	24	192,000
2065230022	MINI50 GEN II 2CKT RECEPTACLE POL B	477991274	477995807	4000	2	8000	24	192,000
2065230023	MINI50 GEN II 2CKT RECEPTACLE POL C	477991274	477995807	4000	2	8000	24	192,000
2065230024	MINI50 GEN II 2CKT RECEPTACLE POL D	477991274	477995807	4000	2	8000	24	192,000
2065230041	MINI50 GEN II 4CKT RECEPTACLE POL A	477991274	477995807	3000	2	6000	24	144,000
2065230042	MINI50 GEN II 4CKT RECEPTACLE POL B	477991274	477995807	3000	2	6000	24	144,000
2065230043	MINI50 GEN II 4CKT RECEPTACLE POL C	477991274	477995807	3000	2	6000	24	144,000
2065230044	MINI50 GEN II 4CKT RECEPTACLE POL D	477991274	477995807	3000	2	6000	24	144,000
2065230081	MINI50 GEN II 8CKT RECEPTACLE POL A	477991274	477995807	1500	2	3000	24	72,000
2065230082	MINI50 GEN II 8CKT RECEPTACLE POL B	477991274	477995807	1500	2	3000	24	72,000
2065230083	MINI50 GEN II 8CKT RECEPTACLE POL C	477991274	477995807	1500	2	3000	24	72,000
2065232041	MINI50 GEN II 4CKT RECEPTACLE POL A WITH CPA	477991274	477995807	3000	2	6000	24	144,000
2065232042	MINI50 GEN II 4CKT RECEPTACLE POL B WITH CPA	477991274	477995807	3000	2	6000	24	144,000
2065232043	MINI50 GEN II 4CKT RECEPTACLE POL C WITH CPA	477991274	477995807	3000	2	6000	24	144,000
2065232044	MINI50 GEN II 4CKT RECEPTACLE POL D WITH CPA	477991274	477995807	3000	2	6000	24	144,000
2065232081	MINI50 GEN II 8CKT RECEPTACLE POL A WITH CPA	477991274	477995807	1500	2	3000	24	72,000
2065232082	MINI50 GEN II 8CKT RECEPTACLE POL B WITH CPA	477991274	477995807	1500	2	3000	24	72,000
2065232083	MINI50 GEN II 8CKT RECEPTACLE POL C WITH CPA	477991274	477995807	1500	2	3000	24	72,000
300352034*	MINI50 GEN II 34CKT CONN ASSY	477991274	477995807	500	2	1000	24	24,000
300352038*	MINI50 GEN II 38CKT CONN ASSY	477991274	477995807	500	2	1000	24	24,000
300352134*	MINI50 GEN II 34CKT CONN ASSY	477991274	477995807	500	2	1000	24	24,000
300352138*	MINI50 GEN II 38CKT CONN ASSY	477991274	477995807	500	2	1000	24	24,000

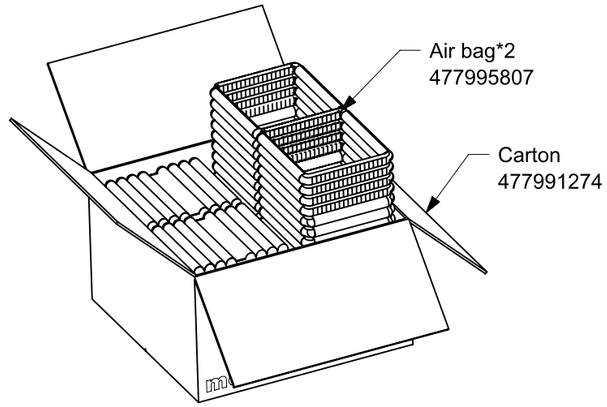

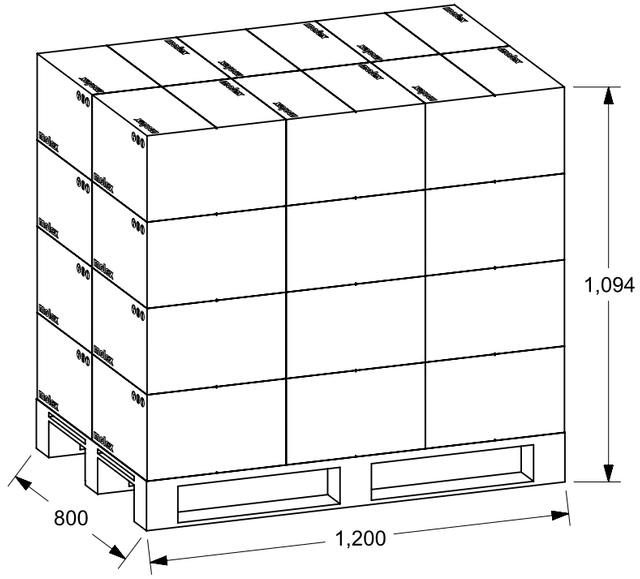

PRE-RELEASE REFERENCE USE ONLY

NOTES:
1. FOLD AND TAPE THE BOTTOM FLAPS OF THE CARTON
2. FILLING THE AIR BAG
3. BULK PACKAGE PRODUCT INTO THE AIR BAG
4. PLACE AIR BAGS WITH PRODUCT INTO THE CARTON (BAGS QUANTITY AS TABLE SHOWN)
5. FOLD AND TAPE THE AIR BAGS
6. FOLD TOP FLAPS OF CARTON AND SEAL WITH TAPE
7. LABEL, THEN PALLETIZE AS SHOWN IF QUANTITIES JUSTIFY.

THIS DRAWING CONTAINS INFORMATION THAT IS PROPRIETARY TO MOLEX ELECTRONIC TECHNOLOGIES, LLC AND SHOULD NOT BE USED WITHOUT WRITTEN PERMISSION

FUNCTIONAL SYMBOLS: FA = 0, FC = 0, FP = 0
DIVISIONAL SYMBOLS

DIMENSION UNITS: MM
SCALE: 1:1
GENERAL TOLERANCES (UNLESS SPECIFIED)
ANGULAR TOL ± 1°
4 PLACES ±
3 PLACES ±
2 PLACES ± 0.130
1 PLACE ± 0.25
0 PLACES ±
DRAFT WHERE APPLICABLE MUST REMAIN WITHIN DIMENSIONS

CURRENT REV DESC: UPDATE PACKAGING
STATUS:
DRWN:
CHK'D:
APPR:
THIRD ANGLE PROJECTION
DRAWING: A3-SIZE
SERIES: 31300

molex

BULK PACK FOR MINI50
ADD NEW PAD NUMBER

PRODUCT DESIGN DRAWING

DOCUMENT NUMBER	DOC TYPE	DOC PART	REVISION
PK-31301-538	PDD	001	L

MATERIAL NUMBER	CUSTOMER	SHEET NUMBER
SEE TABLE	GENERAL MARKET	3 OF 5

FORMAT: TC-PDD-A3
REVISION: B
DATE: 2022/08/01

PART NUMBER	PART DESCRIPTION	CARTON	BAG	QTY/ BAG	BAGS/ CARTON	SPQ	CARTONS/ PALLET	QTY/ PALLET
34791002*	MIN50 GEN1, 1X2 WAY, RECEPTACLE W/O CPA	477991274	477995807	3500	2	7000	24	168,000
34791012*	MIN50 GEN1, 1X2 WAY, RECEPTACLE WITH CPA	477991274	477995807	3000	2	6000	24	144,000
34791014*	MIN50 GEN1, 1X4 WAY, RECEPTACLE W/O CPA	477991274	477995807	2700	2	5400	24	129,600
34791004*		477991274	477995807	2700	2	5400	24	129,600
347915140-3	MIN50 GEN1, 1X4 WAY, RECEPTACLE WITH CPA	477991274	477995807	2700	2	5400	24	129,600
34791018*	MIN50 GEN1, 1X8 WAY, RECEPTACLE W/O CPA	477991274	477995807	1500	2	3000	24	72,000
34791008*		477991274	477995807	1500	2	3000	24	72,000
347915180-2	MIN50 GEN1, 1X8 WAY, RECEPTACLE WITH CPA	477991274	477995807	1500	2	3000	24	72,000
348241120-2,4-6	MIN50 GEN1, 12 WAY, RECEPTACLE W/O CPA	477991274	477995807	950	2	1900	24	45,600
348240120-2,4-6		477991274	477995807	950	2	1900	24	45,600
348245124-6	MIN50 GEN1, 12 WAY, RECEPTACLE WITH CPA	477991274	477995807	950	2	1900	24	45,600
34824016*	MIN50 GEN1, 16 WAY, RECEPTACLE W/O CPA	477991274	477995807	700	2	1400	24	33,600
34824116*		477991274	477995807	700	2	1400	24	33,600
34824216*	MIN50 GEN1, 16 WAY, RECEPTACLE WITH CPA	477991274	477995807	600	2	1200	24	28,800
34824120*	MIN50 GEN1, 20 WAY, RECEPTACLE W/O CPA	477991274	477995807	600	2	1200	24	28,800
34824020*		477991274	477995807	600	2	1200	24	28,800
34824220*	MIN50 GEN1, 20 WAY, RECEPTACLE WITH CPA	477991274	477995807	600	2	1200	24	28,800
34824024*	MIN50 GEN1, 24 WAY, RECEPTACLE W/O CPA	477991274	477995807	550	2	1100	24	26,400
34824124*		477991274	477995807	550	2	1100	24	26,400
34824224*	MIN50 GEN1, 24 WAY, RECEPTACLE WITH CPA	477991274	477995807	550	2	1100	24	26,400
349590340-5,7-9	MIN50 GEN1, 34 WAY, RECEPTACLE WITH CPA	477991274	477995807	550	2	1100	24	26,400
2133560340-5		477991274	477995807	550	2	1100	24	26,400
349590383-5,7-9	MIN50 GEN1, 38 WAY, RECEPTACLE WITH CPA	477991274	477995807	550	2	1100	24	26,400
34959039*		477991274	477995807	550	2	1100	24	26,400
2133560380-5		477991274	477995807	550	2	1100	24	26,400
2005760081-3	MINI50 AK 8CKT RECEPTACLE W/O CPA	477991274	477995807	1000	2	2000	24	48,000
2005760084-6	MINI50 AK 8CKT RECEPTACLE WITH CPA	477991274	477995807	1000	2	2000	24	48,000

PRE-RELEASE REFERENCE USE ONLY

THIS DRAWING CONTAINS INFORMATION THAT IS PROPRIETARY TO MOLEX ELECTRONIC TECHNOLOGIES, LLC AND SHOULD NOT BE USED WITHOUT WRITTEN PERMISSION

FUNCTIONAL SYMBOLS: FA = 0, FC = 0, FP = 0

DIVISIONAL SYMBOLS

DIMENSION UNITS: MM | SCALE: 1:1

GENERAL TOLERANCES (UNLESS SPECIFIED)

ANGULAR TOL	± 1°
4 PLACES	±
3 PLACES	±
2 PLACES	± 0.130
1 PLACE	± 0.25
0 PLACES	±

DRAFT WHERE APPLICABLE MUST REMAIN WITHIN DIMENSIONS

CURRENT REV DESC: UPDATE PACKAGING

STATUS:
DRWN:
CHK'D:
APPR:

THIRD ANGLE PROJECTION

DRAWING: A3-SIZE | SERIES: 31300

molex

BULK PACK FOR MINI50
ADD NEW PAD NUMBER

PRODUCT DESIGN DRAWING

DOCUMENT NUMBER	DOC TYPE	DOC PART	REVISION
PK-31301-538	PDD	001	L

MATERIAL NUMBER	CUSTOMER	SHEET NUMBER
SEE TABLE	GENERAL MARKET	4 OF 5

FORMAT: TC-4100-A3
REVISION: B
DATE: 2022/08/01

FOR CHENGDU PLANT

PRODUCT MAT'L #	PRODUCT DESCRIPTION	SPQ	CARTON MAT'L #	TOTE MAT'L #	BAG MAT'L #		BAGS/ CARTON	PARTITION MAT'L #	PARTITIONS/ CARTON	BUBBLE MAT'L #	BUBBLE/ CARTON	PAD MAT'L #	PADS/ CARTON	GROSS WEIGHT
					Manual	Automatic								
335361605	MX150 SEALED, 16 WAY HYBRID RCPT, 2 ROW GROMMET CAP *SEE NOTE 7*	3000	477991017		967130002		1	477994053	2	477995046	2	477994086	1	TBD

H1	UPDATED THE TABLE IN SHEET 2 & ADDED NEW TBALE IN SHEET 4	20220810
H	1. Add new bag(477995826) for automatic packaging 2. Delete note7 "INDIVIDUAL CARTONS MAY BE SHIPPED WITHOUT PALLETIZATION WHEN ORDERS ARE LOW IN VOLUME."	20210827
F	OBSOLETE PART NUMBERS 349590380 349590381 349590382 349590387 349590388	20201103
E2	UPDATE THE SPQ OF 2075840121/2/3,2075842121/2/3,2075840161/2/3,2075842161/2/3, 2058272021/2/3,2058272051/2/3,2058272061/2/3	20190626
E3	UPDATE THE SPQ OF 2058272031/2/3,2058272041/2/3	20190712
E4	ADD NEW PN 2133560340--5, 2133560380--5	20200727
	UPDATE THE NOTE ABOUT AND SEAL BAG FOR 20582720**	
E5	1. ADD NEW PN 349591340-5, 348591380-5; 2. THE BAG OF FOLLOWING PRODUCTS ARE CHANGE TO 477995814: 34824224*,206523212*,206523224*,206523216*,206523220*,207584212*,207584216*	20200915
E6	UPDATE PART NUMBER FROM 348591380-5 TO 349591380-5	20210719
I	UPDATE PAD NUMBER FROM 477994044 TO 477994086	20240304
J	ADD NEW P/N ADD NEW P/N 206523002*, 206523004*, 206523008*, 206523204*, 206523208*, 300352034*, 300352038*, 300352134*, 300352138*	20240328

PRE-RELEASE REFERENCE USE ONLY

THIS DRAWING CONTAINS INFORMATION THAT IS PROPRIETARY TO MOLEX ELECTRONIC TECHNOLOGIES, LLC AND SHOULD NOT BE USED WITHOUT WRITTEN PERMISSION

FUNCTIONAL SYMBOLS: FA = 0, FC = 0, FP = 0

DIVISIONAL SYMBOLS

DIMENSION UNITS	SCALE
MM	1:1

GENERAL TOLERANCES (UNLESS SPECIFIED)

ANGULAR TOL	± 1°
4 PLACES	±
3 PLACES	±
2 PLACES	± 0.130
1 PLACE	± 0.25
0 PLACES	±

DRAFT WHERE APPLICABLE MUST REMAIN WITHIN DIMENSIONS

CURRENT REV DESC: UPDATE PACKAGING

STATUS:
DRWN:
CHK'D:
APPR:

THIRD ANGLE PROJECTION | DRAWING: A3-SIZE | SERIES: 31300

molex

BULK PACK FOR MINI50
ADD NEW PAD NUMBER

PRODUCT DESIGN DRAWING

DOCUMENT NUMBER	DOC TYPE	DOC PART	REVISION
PK-31301-538	PDD	001	L

MATERIAL NUMBER	CUSTOMER	SHEET NUMBER
	GENERAL MARKET	5 OF 5