GENERAL TOLERANCE											
	10 MAX	50 MAX	100 MAX	250 MAX	250 OVR	R5 MAX	R10 MAX	R20 MAX	R20 OVR	ANGLE	ECCENT
A	±0.15	±0.2	±0.3	±0.5	±0.75	±0.2	±0.3	±0.5	±2.5	±3°	0.1
B	±0.2	±0.3	±0.55	±0.95	±1.4					±3°	0.1
Ⓒ	±0.3	±0.5	±0.8	±1.4	±2.0					±3°	0.15
SPECIFIED										MASS	

2 PART NUMBER	APPLICABLE WIRE SIZE		INSULATION OD (mm)	GRIP DIMENSIONS					
	AWG	mm²		W1	R1	W2	R2	C	D
7116-4140-06	20 - 16	0.50 - 1.25	1.40 - 2.30	3.10	0.70	6.40	1.90	4.00	10.50
7116-4141-06	14	1.40 - 2.50	2.10 - 3.00	4.00	0.95	7.30	2.20	4.00	10.50
7116-7142-06	12	3.00 - 4.00	3.00 - 3.80	5.00	1.35	8.30	2.70	4.50	11.00
7116-4143-06	10	5.00 - 6.00	3.80 - 4.30	5.60	1.35	9.10	2.90	4.50	11.00

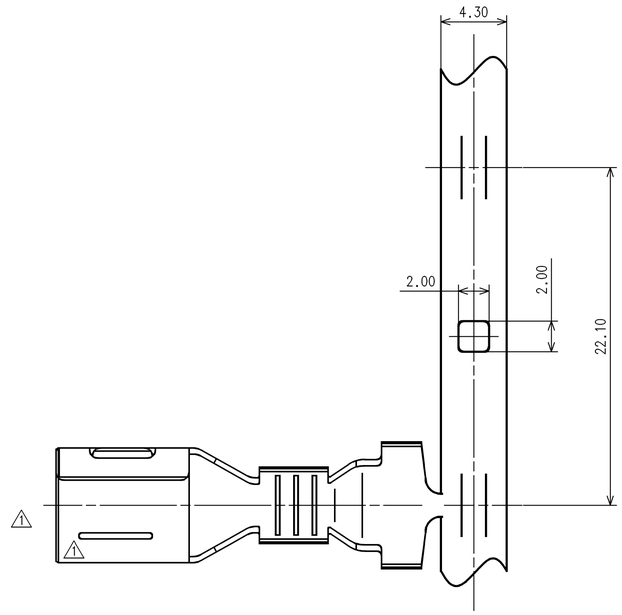

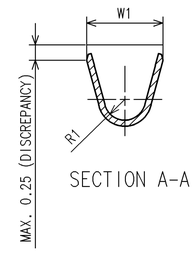

SECTION A-A

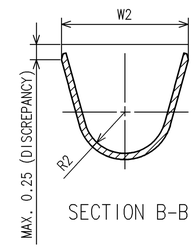

SECTION B-B

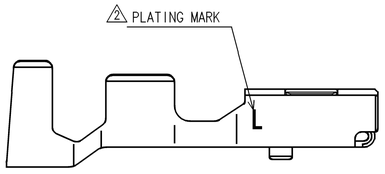

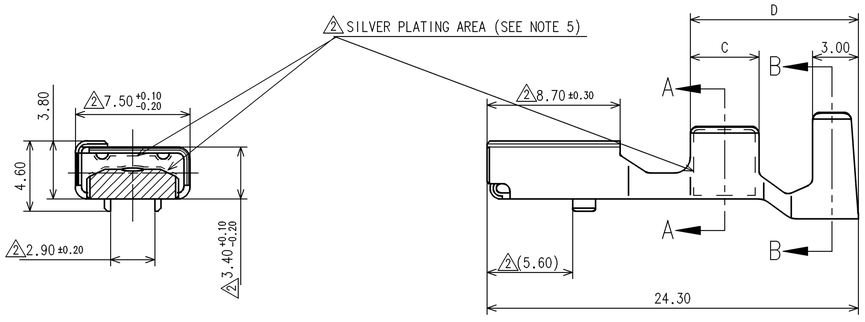

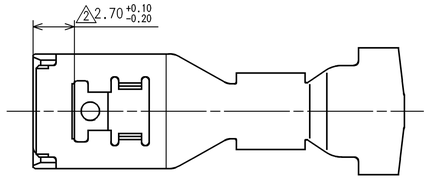

2 NOTES:

1. PARTS MUST BE PURCHASED FROM YAZAKI.
2. PARTS MUST BE FREE OF BURRS AND SHARP EDGES THAT MAY BE DETRIMENTAL TO SATISFACTORY ASSEMBLY, SAFE HANDLING, OF FUNCTION OF THE PART.
3. MATING TERMINAL NUMBER: N/A.
4. MATERIAL: COPPER ALLOY.
5. PLATING TREATMENT: (Ni) NICKEL PLATED (ALL OVER)
   (Ag) SILVER PLATED CONTACT AND WIRE CRIMP AREA (AS SHOWN).
6. PART DESIGNED TO SATISFY USCAR 2, REV. 6 FEBRUARY 2013 (TEMPERATURE CLASS 3).
7. THE MATERIALS USED IN THIS PRODUCT ARE IN CONFORMITY WITH REQUIREMENTS OF EU ELV 2000/53/EC DIRECTIVE AND ASSOCIATED DOCUMENTS.
8. APPLICABLE CABLE SEAL: SEE 7158-3081-50:R AND 7158-3084-40:RA.
9. PART TO COMPLY WITH YPES-31-038 REQUIREMENTS.
10. THIS DRAWING IS TO BE USED FOR INTERNAL YAZAKI PSW SUBMISSION.

LET	DATE	REVISION RECORD	NO.	CHKD
2	09-18-2015	ADDED NOTES, PART NUMBERS, VIEWS PLATING AREA & DIMENSIONS	C15-A697	V.L.
1	11-15-2011	EDIT DIMENSION, ADD RIB	Y11-0825	J.J.
-	09-26-2011	NEW	Y11-0708	J.J.

ISSUE MARK

CUSTOMER			
CUSTOMER PART NO.	CUSTOMER DWG NO.	MATL. SPEC. SEE NOTES	TREAT. & FIN. SEE NOTES
OFFICE YNA	TRIAL PART NO.	NAME 6.3mm YESC SEALED FEMALE TERMINAL	
VENDOR			
VENDOR NO.			
DWG TYPE: R	DWG SOURCE: 7116-7142-06:M 2	DWG DATE: 09-26-2011	UNIT: mm, SCL: 5/1, ANGLE: 3
APPROVED	CHECKED	CHECKED	DESIGN: D. BABIC 01-24-2011
DRAWN: VALENTIN LOYA 09-18-2015	PART NO. 7116-7142-06 ETC.	CH. CODE	DWG NO. 7116-7142-06:R
YAZAKI CORPORATION			

Digitally signed by Justyn Gerwatowski DN: cn=Justyn Gerwatowski, o=Yazaki, c=US, email=jgerwatowski@yazaki.com Date: 2015.09.18 15:58:53 -04'00'