TABLE OF CONTENTS

SHEET NO.	SHEET DESCRIPTION
1	NOTES AND BOM
2	CONFIGURATIONS
3-4	KEY CONFIGURATIONS
5	RECEPTACLE CONNECTOR ASSEMBLY
6	2X10 CONNECTOR INTERFACE DEFINITION

NOTES: VALID UNLESS OTHERWISE SPECIFIED

1. GENERAL:
a. APPLICATION SPECIFICATION SEE: AS-33472-100
-CONTAINS: PRODUCT INTRODUCTION, PRODUCT SUMMARY, CONNECTOR ASSEMBLY, PACKAGING INFORMATION, CONNECTOR MATING, SERVICE INSTRUCTIONS, ELECTRICAL CONTINUITY CHECKING, CRIMPING, AND TROUBLESHOOTING.
-DESIGNED TO MATE WITH DEVICE OR CONNECTOR AS SPECIFIED IN THE MATING INTERFACE/CONNECTOR DRAWINGS CHART.
*DENOTES DRAWINGS THAT CAN BE ACCESSED AT <http://ewcap.uscarteams.org/>.
-ASSEMBLY SHIPPED WITH PLR IN PRE-LOCK POSITION (SEE PLR PRE-LOCK VIEW SHEET 5).

b. PRODUCT SPECIFICATION SEE: PS-160008-0001
CONTAINS: SCOPE, PRODUCT DESCRIPTION, INTEGRAL COMPONENTS AND ACCESSORIES, APPLICABLE DOCUMENTS AND SPECIFICATIONS, RATINGS, PERFORMANCE, PACKAGING, GUAGES AND FIXTURES, AND OTHER INFORMATION.
c. PACKAGING SPECIFICATION PER MOLEX DRAWING: SEE PACKAGING CHART.
d. PARTS MUST BE IN COMPLIANCE TO MOLEX CHEMICAL SUBSTANCES FOR PRODUCTS AND PACKAGING SPECIFICATION: QEHS-699000-300
e. DATA MUST BE SUBMITTED UNDER THE MOLEX PART NUMBER TO IMDS (COMPANY ID#13255)

2. DESIGN - MATERIALS:
a. SEE BOM TABLE IN 1600080002-RSD, 1601270002-SD

3. DESIGN - GEOMETRY:
a. THE 3-D CAD DATA IS BASIC (WITHOUT TOLERANCE) AND MASTER FOR THIS PART WITH THE EXCEPTION OF UNDERLINED DIMENSIONS. DIMENSIONAL INFORMATION NOT SHOWN ON THIS DRAWING IS DEFINED BY THE DATA FILE AT ITS LATEST REVISION.
b. GEOMETRIC DIMENSIONS AND TOLERANCES PER ASME Y14.5M-2009
c. EDGES AND UNDIMENSIONED DETAILS PER ISO13715
d. CORNERS SHOWN AS SHARP TO BE R 0.2 MAX.
e. LETTERING SHALL BE 0.15 MAX RAISED IN 0.25 MAX RECESS PAD. THIS INCLUDES RECYCLING CODE, CAVITY ID, VENDOR IDENTIFICATION, AND CUSTOMER MATERIAL NUMBER.
f. VISUAL DEFECTS SHALL MEET COSMETIC STANDARD PS-45499-002 (Class B).
g. LASER MARKING:
1. PART NUMBER
2. DAY OF THE YEAR
3. SHIFT
4. YEAR
FOR ADDITIONAL INFORMATION SEE SECTION 5 UNDER PROCEDURES IN ES-34735-008.

PACKAGING

DESCRIPTION	DRAWING NO.
2X2	TBD
2X3	TBD
2X4	PK-33472-001
2X6	PK-31300-903
2X8	TBD
2X10	PK-31300-903

MATING CONNECTOR DRAWINGS

DESCRIPTION	INTERFACE DEFINITION	MOLEX INLINE
2X2	*150-S-004-2-Z02	TBD
2X3	*150-S-006-2-Z02	TBD
2X4	*150-S-008-2-Z02	SD-160011-0001
2X6	*150-S-012-2-Z01	SD-160011-0001
2X8	*150-S-016-2-Z01	SD-160011-0001
2X10	E-160008-0001	SD-160011-0001

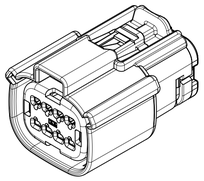

2X4

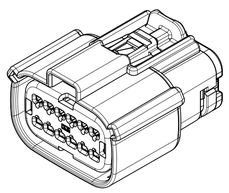

2X6

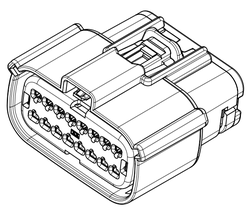

2X8

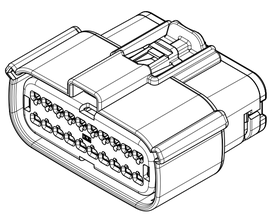

2X10

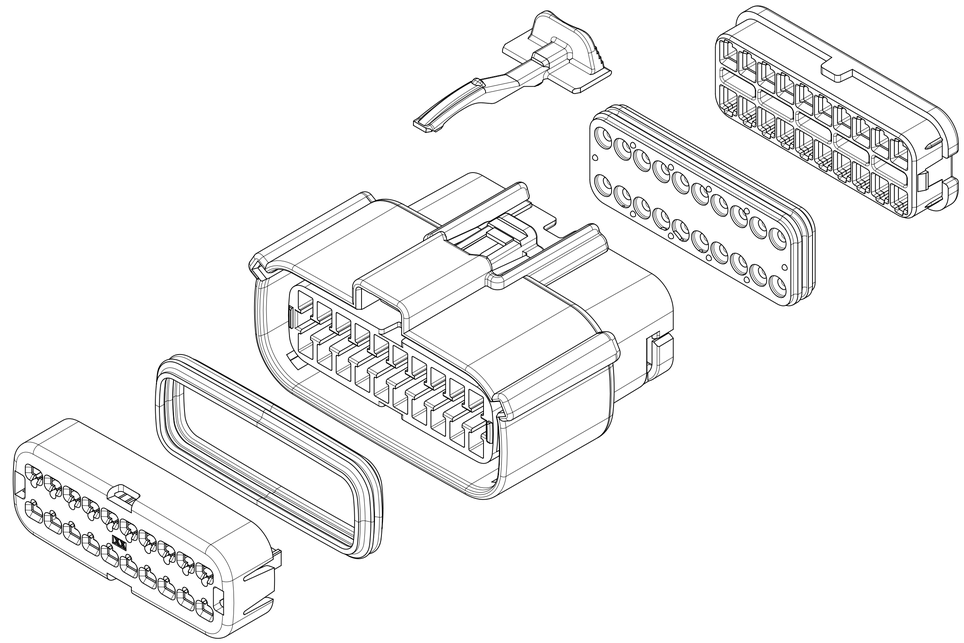

INSPECTION NUMBER LOG
LAST NUMBER:
ADDED:
REMOVED:

REV	REV DESCRIPTION
A8	UPDATED NOTE 2a IN SHEET 1
A7	ADDED GEN 2 2X6 & 2X8
A5	ADDED MOLEX BACKSHELL DETAILS
A4	UPDATED INTERFACE SHEET
A3	ADDED SHEET 6 & UPDATED PASS THRU
A2	UPDATED NOTES
A1	UPDATED DIM 4
A	INITIAL RELEASE

THIS DRAWING CONTAINS INFORMATION THAT IS PROPRIETARY TO MOLEX ELECTRONIC TECHNOLOGIES, LLC AND SHOULD NOT BE USED WITHOUT WRITTEN PERMISSION

FUNCTIONAL SYMBOLS
FA = 0
FC = 0
FP = 0
DIVISIONAL SYMBOLS

DIMENSION UNITS	SCALE
mm	1.5:1

GENERAL TOLERANCES (UNLESS SPECIFIED)

ANGULAR TOL	± 3.0°
4 PLACES	±
3 PLACES	±
2 PLACES	± 0.100
1 PLACE	± 0.20
0 PLACES	±

DRAFT WHERE APPLICABLE MUST REMAIN WITHIN DIMENSIONS

CURRENT REV DESC: SEE REVISION TABLE

PHASE: Design Production
CO NO: CO-000001111
DRWN: Srikanth CV 2022-06-28
CHK'D: Joe Fox 2022-08-24
APPR: Katy Boruszewski 2022-09-01

INITIAL REVISION:
DRWN: KBORUSZEWSKI 2014/02/19
APPR: VKOSHY 2014/03/05

THIRD ANGLE PROJECTION | DRAWING: A1-SIZE | SERIES: 160008

molex

MX150 GEN 2 RECEPTACLE
DUAL ROW SEALED ASSEMBLY

PRODUCT SALES DRAWING

DOCUMENT NUMBER	DOC TYPE	DOC PART	REVISION
SD-160008-0001	PSD	001	A8

MATERIAL NUMBER | CUSTOMER: GENERAL MARKET | SHEET NUMBER: 1 OF 11

FORMAT TC:dwgmod47
SIZE: A1-SIZE
DATE: 2021/06/11

SHEET DESCRIPTION
CONFIGURATIONS

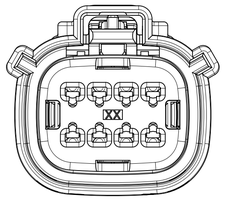

2X4
STANDARD

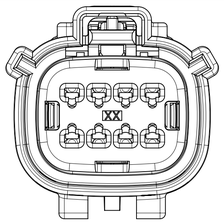

2X4
WITH CLIPSLOT *

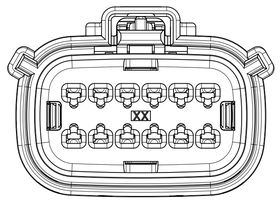

2X6
STANDARD

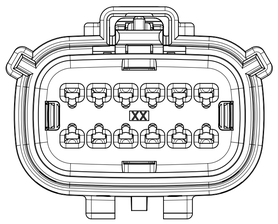

2X6
WITH CLIPSLOT *

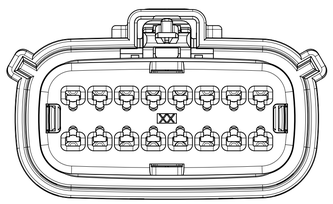

2X8
STANDARD

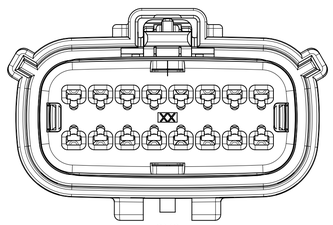

2X8
WITH CLIPSLOT *

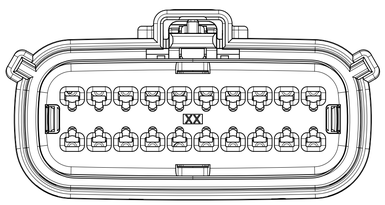

2X10
STANDARD

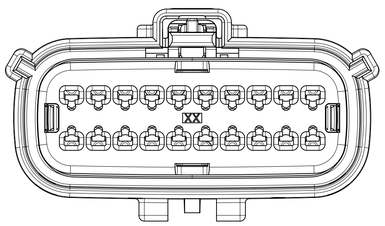

2X10
WITH CLIPSLOT *

* WITH CLIPSLOT CONFIGURATION DOES NOT
MEET THE USCAR PACKAGING FRAME REQUIREMENTS.

THIS DRAWING CONTAINS INFORMATION THAT IS PROPRIETARY TO MOLEX ELECTRONIC TECHNOLOGIES, LLC AND SHOULD NOT BE USED WITHOUT WRITTEN PERMISSION

FUNCTIONAL SYMBOLS	DIMENSION UNITS	SCALE
FA = 0	mm	2.5:1
FC = 0	GENERAL TOLERANCES (UNLESS SPECIFIED)	
FP = 0	ANGULAR TOL	± 3.0°
DIVISIONAL SYMBOLS	4 PLACES	±
	3 PLACES	±
	2 PLACES	± 0.100
	1 PLACE	± 0.20
	0 PLACES	±
	DRAFT WHERE APPLICABLE MUST REMAIN WITHIN DIMENSIONS	

CURRENT REV DESC: SEE REVISION TABLE

PHASE: Design Production
CO NO: CO-000001111
DRWN: Srikanth CV 2022-06-28
CHK'D: Joe Fox 2022-08-24
APPR: Katy Boruszewski 2022-09-01

INITIAL REVISION:
DRWN: KBORUSZEWSKI 2014/02/19
APPR: VKOSHY 2014/03/05

molex

MX150 GEN 2 RECEPTACLE
DUAL ROW SEALED ASSEMBLY

PRODUCT SALES DRAWING

DOCUMENT NUMBER	DOC TYPE	DOC PART	REVISION
SD-160008-0001	PSD	001	A8

THIRD ANGLE PROJECTION	DRAWING	SERIES	MATERIAL NUMBER	CUSTOMER	SHEET NUMBER
	A1-SIZE	160008		GENERAL MARKET	2 OF 11

FORMAT TC1dpnpsA1
REVISION A
DATE 2017/06/13

SHEET DESCRIPTION
KEY CONFIGURATIONS

2X4

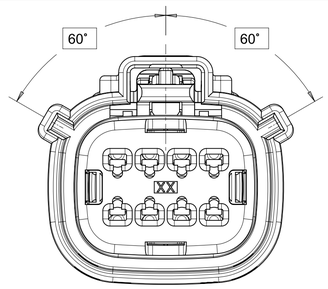

KEY A

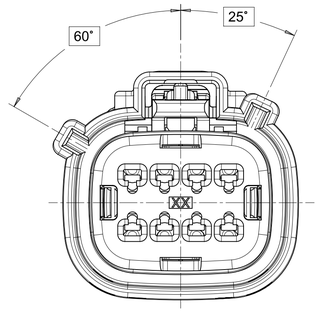

KEY B

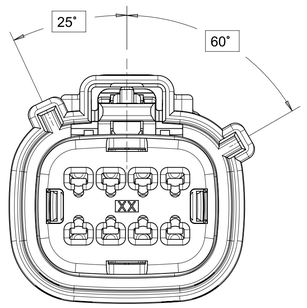

KEY C

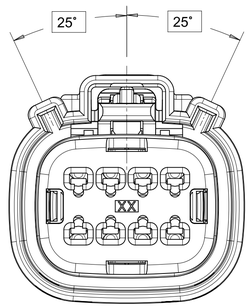

KEY D

THIS DRAWING CONTAINS INFORMATION THAT IS PROPRIETARY TO MOLEX ELECTRONIC TECHNOLOGIES, LLC AND SHOULD NOT BE USED WITHOUT WRITTEN PERMISSION

FUNCTIONAL SYMBOLS	
FA	= 0
FC	= 0
FP	= 0
DIVISIONAL SYMBOLS	

DIMENSION UNITS	SCALE
mm	1:1
GENERAL TOLERANCES (UNLESS SPECIFIED)	
ANGULAR TOL	± 3.0˚
4 PLACES	±
3 PLACES	±
2 PLACES	± 0.100
1 PLACE	± 0.20
0 PLACES	±
DRAFT WHERE APPLICABLE MUST REMAIN WITHIN DIMENSIONS	

CURRENT REV DESC: SEE REVISION TABLE

PHASE:	Design Production	
CO NO:	CO-000001111	
DRWN:	Srikanth CV	2022-06-28
CHK'D:	Joe Fox	2022-08-24
APPR:	Katy Boruszewski	2022-09-01
INITIAL REVISION:		
DRWN:	KBORUSZEWSKI	2014/02/19
APPR:	VKOSHY	2014/03/05

THIRD ANGLE PROJECTION | DRAWING: A1-SIZE | SERIES: 160008

molex

MX150 GEN 2 RECEPTACLE
DUAL ROW SEALED ASSEMBLY

PRODUCT SALES DRAWING

DOCUMENT NUMBER	DOC TYPE	DOC PART	REVISION
SD-160008-0001	PSD	001	A8

MATERIAL NUMBER	CUSTOMER	SHEET NUMBER
	GENERAL MARKET	3 OF 11

FORMAT TC(engineA)
REVISION: H
DATE: 2017/06/13

SHEET DESCRIPTION
KEY CONFIGURATIONS CONT.

2X6

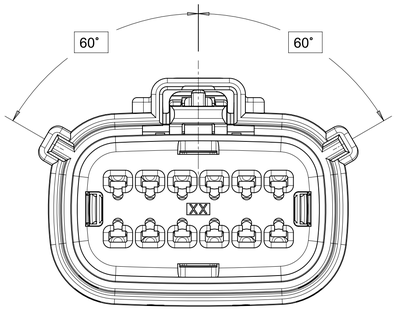

KEY A

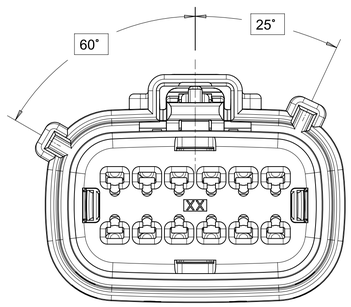

KEY B

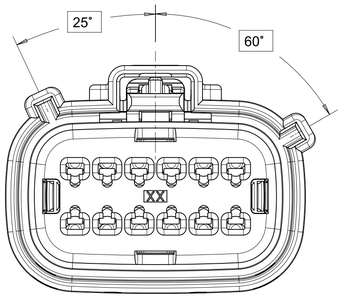

KEY C

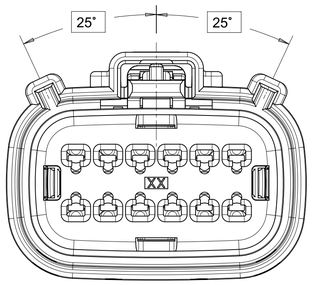

KEY D

2X8

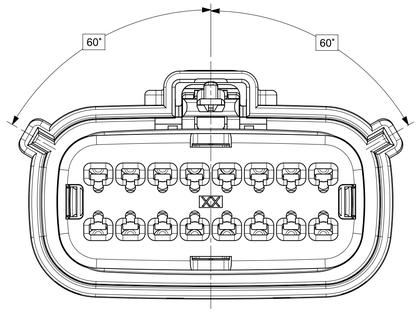

KEY A

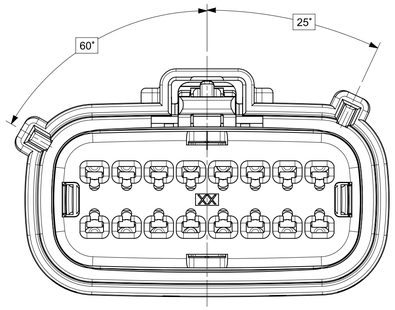

KEY B

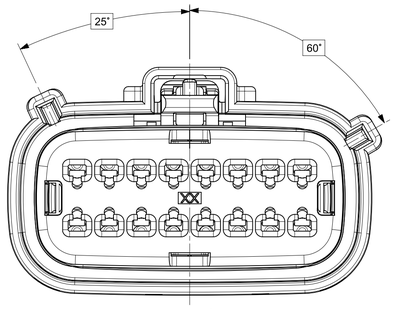

KEY C

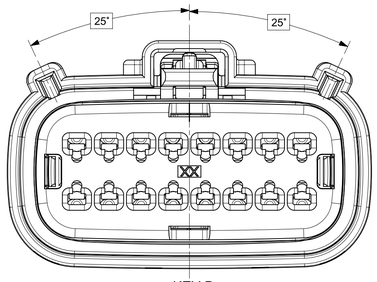

KEY D

2X10

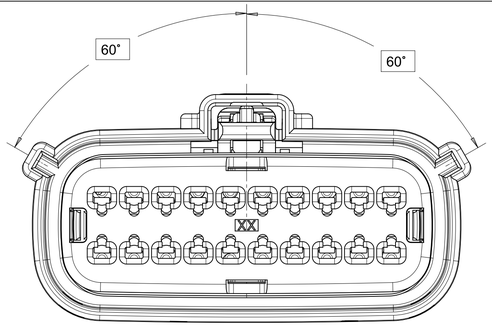

KEY A

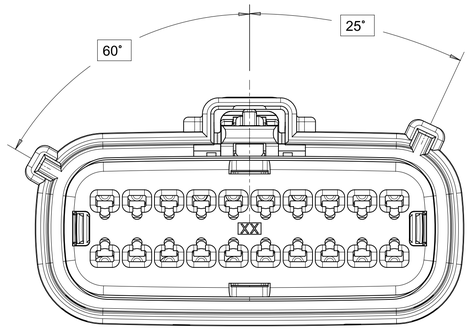

KEY B

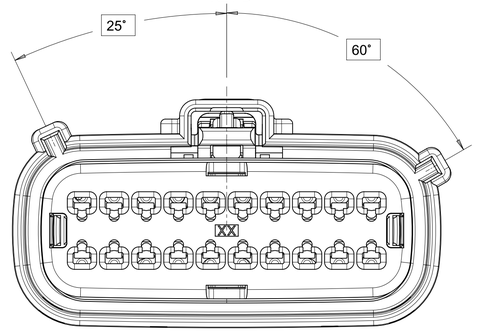

KEY C

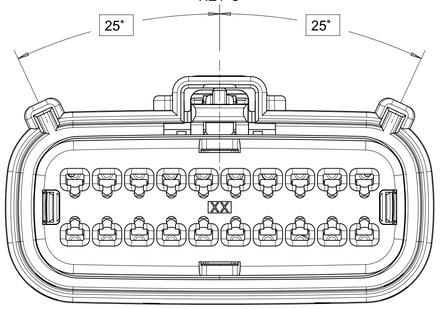

KEY D

THIS DRAWING CONTAINS INFORMATION THAT IS PROPRIETARY TO MOLEX ELECTRONIC TECHNOLOGIES, LLC AND SHOULD NOT BE USED WITHOUT WRITTEN PERMISSION

FUNCTIONAL SYMBOLS	
FA	= 0
FC	= 0
FP	= 0
DIVISIONAL SYMBOLS	

DIMENSION UNITS	SCALE
mm	3:1
GENERAL TOLERANCES (UNLESS SPECIFIED)	
ANGULAR TOL	± 3.0˚
4 PLACES	±
3 PLACES	±
2 PLACES	± 0.100
1 PLACE	± 0.20
0 PLACES	±
DRAFT WHERE APPLICABLE MUST REMAIN WITHIN DIMENSIONS	

CURRENT REV DESC: SEE REVISION TABLE

PHASE:	Design Production	
CO NO:	CO-000001111	
DRWN:	Srikanth CV	2022-06-28
CHK'D:	Joe Fox	2022-08-24
APPR:	Katy Boruszewski	2022-09-01
INITIAL REVISION:		
DRWN:	KBORUSZEWSKI	2014/02/19
APPR:	VKOSHY	2014/03/05

THIRD ANGLE PROJECTION | DRAWING: A1-SIZE | SERIES: 160008

molex

MX150 GEN 2 RECEPTACLE
DUAL ROW SEALED ASSEMBLY

PRODUCT SALES DRAWING

DOCUMENT NUMBER	DOC TYPE	DOC PART	REVISION
SD-160008-0001	PSD	001	A8

MATERIAL NUMBER	CUSTOMER	SHEET NUMBER
	GENERAL MARKET	4 OF 11

FORMAT: T-Engineer A1
PROPERTIES: 4
DATE: 2021/08/11

SHEET DESCRIPTION
RECEPTACLE CONNECTOR ASSEMBLY

CHARTED DIMENSION				
DESCRIPTION	DIMENSIONS			
	A	B	C	D
2X2 STANDARD	TBD	TBD	TBD	TBD
2X2 W/ CLIPSLOT	TBD	TBD	TBD	TBD
2X3 STANDARD	TBD	TBD	TBD	TBD
2X3 W/ CLIPSLOT	TBD	TBD	TBD	TBD
2X4 STANDARD	14.24	1.75	29.9	10.92
2X4 W/ CLIPSLOT	14.24	1.75	31.1	13.81
2X6 STANDARD	17.75	1.75	35.6	10.92
2X6 W/ CLIPSLOT	17.75	1.75	35.6	13.81
2X8 STANDARD	21.25	1.75	42.3	10.92
2X8 W/ CLIPSLOT	21.25	1.75	42.3	13.81
2X10 STANDARD	24.75	1.75	49.8	10.92
2X10 W/ CLIPSLOT	24.75	1.75	49.8	13.81

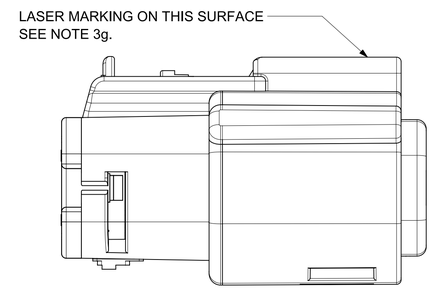

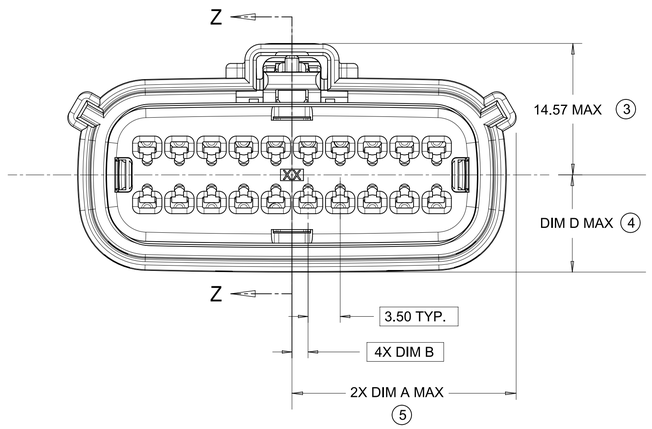

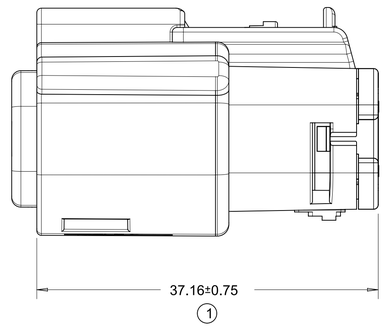

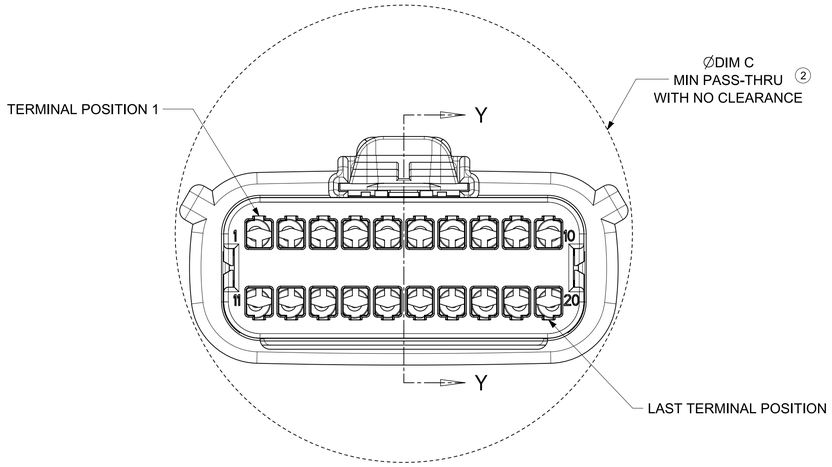

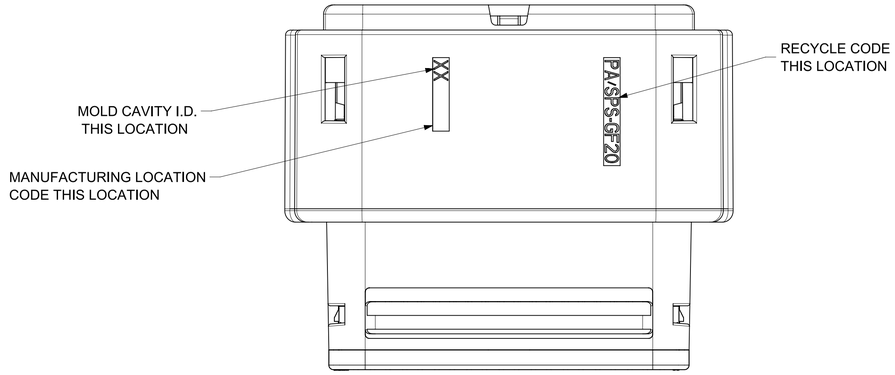

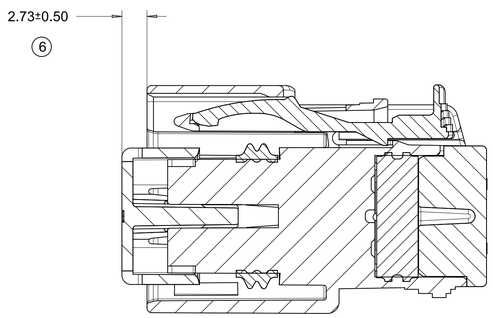

PRIMARY LOCK REINFORCEMENT (PLR) SHOWN
IN PRE-STAGED POSITION

SECTION Z-Z

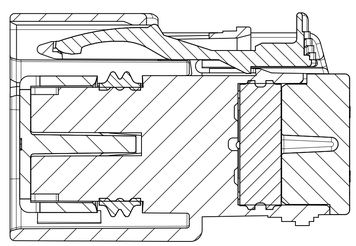

PRIMARY LOCK REINFORCEMENT (PLR) SHOWN
IN FINAL-LOCK POSITION

SECTION Y-Y

FUNCTIONAL SYMBOLS	THIS DRAWING CONTAINS INFORMATION THAT IS PROPRIETARY TO MOLEX ELECTRONIC TECHNOLOGIES, LLC AND SHOULD NOT BE USED WITHOUT WRITTEN PERMISSION		
FA = 0	DIMENSION UNITS: mm	SCALE: 1:1	CURRENT REV DESC: SEE REVISION TABLE
FC = 0	GENERAL TOLERANCES (UNLESS SPECIFIED)		PHASE: Design Production
FP = 0	ANGULAR TOL ± 3.0°		CO NO: CO-000001111
DIVISIONAL SYMBOLS	4 PLACES ±		DRWN: Srikanth CV 2022-06-28
	3 PLACES ±		CHK'D: Joe Fox 2022-08-24
	2 PLACES ± 0.100		APPR: Katy Boruszewski 2022-09-01
	1 PLACE ± 0.20		INITIAL REVISION:
	0 PLACES ±		DRWN: KBORUSZEWSKI 2014/02/19
	DRAFT WHERE APPLICABLE MUST REMAIN WITHIN DIMENSIONS		APPR: VKOSHY 2014/03/05

THIRD ANGLE PROJECTION	DRAWING	SERIES	MATERIAL NUMBER	CUSTOMER	SHEET NUMBER
	A1-SIZE	160008		GENERAL MARKET	5 OF 11

molex

MX150 GEN 2 RECEPTACLE
DUAL ROW SEALED ASSEMBLY

PRODUCT SALES DRAWING

DOCUMENT NUMBER	DOC TYPE	DOC PART	REVISION
SD-160008-0001	PSD	001	A8

SHEET DESCRIPTION
BACKSHELL NOTES

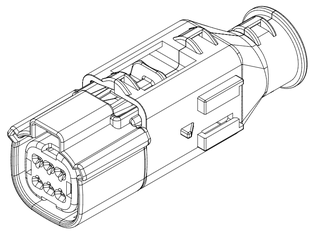

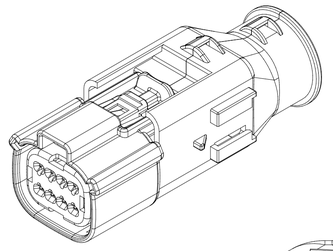

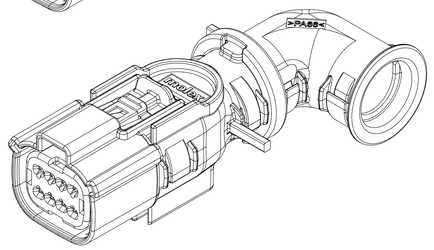

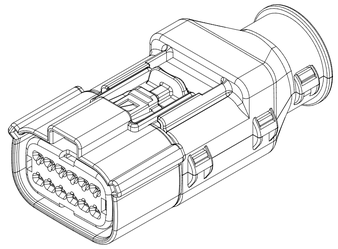

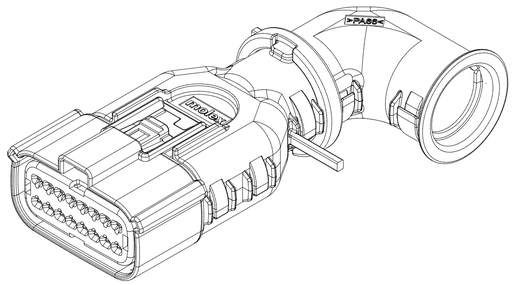

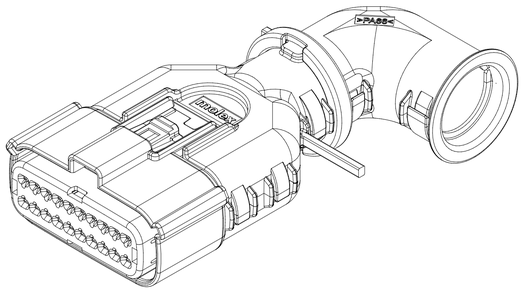

BACKSHELL NOTES: VALID UNLESS OTHERWISE SPECIFIED

1. GENERAL:
a. APPLICATION SPECIFICATION SEE: AS-34951-001
- -DESIGNED TO MATE WITH RECEPTACLE SEALED ASSEMBLY
- -SPECIFIED IN MOLEX DRAWING SD-33472-0001
- -SYSTEM TO BE USED WITH WIRE WITHIN DIAMETER RANGE OF 1.2mm TO 2.69mm
- -COMPONENTS ARE OPTIONAL AND MUST BE PURCHASED SEPERATELY
- -DESIGN IS OWNED BY SCHLEMMER FOR SCHLEMMER BACKSHELL.
- -DESIGN IS OWNED BY MOLEX FOR MOLEX BACKSHELL.
- -90˚ ADAPTOR DESIGN IS OWNED BY MOLEX.
- -FOR ADDITIONAL INFORMATION SEE THE BACKSHELL COMPONENT DRAWING SD-34951-0001

BACKSHELL CUSTOMER
MODEL NUMBER LEGEND

34951-XXXX

CUSTOMER MODEL COMPONENTS
- 0 - SCHLEMMER BACKSHELL ONLY
- 1 - SCHLEMMER BACKSHELL & MX150 HOUSING KEY A ASSEMBLY
- 2 - SCHLEMMER BACKSHELL & MX150 HOUSING KEY B ASSEMBLY
- 3 - SCHLEMMER BACKSHELL & MX150 HOUSING KEY C ASSEMBLY
- 4 - SCHLEMMER BACKSHELL & MX150 HOUSING KEY D ASSEMBLY
- 5 - MOLEX BACKSHELL ONLY
- 6 - MOLEX BACKSHELL & MX150 HOUSING KEY A ASSEMBLY
- 7 - MOLEX BACKSHELL & MX150 HOUSING KEY B ASSEMBLY
- 8 - MOLEX BACKSHELL & MX150 HOUSING KEY C ASSEMBLY
- 9 - MOLEX BACKSHELL & MX150 HOUSING KEY D ASSEMBLY

BACKSHELL FEATURES
- 1 - WITH RIBS
- 2 - WITHOUT RIBS
- 3 - 90˚ ADAPTOR

MX150 CIRCUIT SIZE 04, 06, 08, 12, 16, 20

90˚ ADAPTOR

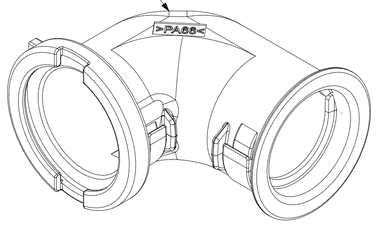

BACKSHELL (BKS)

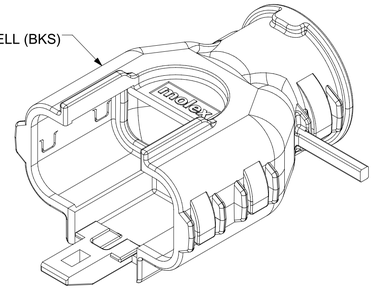

RECEPTACLE SEALED ASSEMBLY

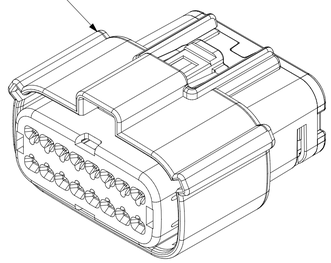

SCALE 2:1

FUNCTIONAL SYMBOLS				
F A = 0	DIMENSION UNITS: mm	SCALE: 1:1		
F C = 0	GENERAL TOLERANCES (UNLESS SPECIFIED)			
F D = 0	ANGULAR TOL	± 3.0˚		
DIVISIONAL SYMBOLS	4 PLACES	±		
	3 PLACES	±		
	2 PLACES	± 0.100		
	1 PLACE	± 0.20		
	0 PLACES	±		
	DRAFT WHERE APPLICABLE MUST REMAIN WITHIN DIMENSIONS			

THIS DRAWING CONTAINS INFORMATION THAT IS PROPRIETARY TO MOLEX ELECTRONIC TECHNOLOGIES, LLC AND SHOULD NOT BE USED WITHOUT WRITTEN PERMISSION

CURRENT REV DESC: SEE REVISION TABLE

PHASE:	Design Production	
CO NO:	CO-000001111	
DRWN:	Srikanth CV	2022-06-28
CHK'D:	Joe Fox	2022-08-24
APPR:	Katy Boruszewski	2022-09-01

INITIAL REVISION:

DRWN:	KBORUSZEWSKI	2014/02/19
APPR:	VKOSHY	2014/03/05

molex

MX150 GEN 2 RECEPTACLE
DUAL ROW SEALED ASSEMBLY

PRODUCT SALES DRAWING

DOCUMENT NUMBER	DOC TYPE	DOC PART	REVISION
SD-160008-0001	PSD	001	A8

THIRD ANGLE PROJECTION	DRAWING	SERIES	MATERIAL NUMBER	CUSTOMER	SHEET NUMBER
	A1-SIZE	160008		GENERAL MARKET	6 OF 11

FORMAT: TC-Engineer-A1
TEMPLATE: 000
DATE: 2021/06/11

SHEET DESCRIPTION
SCHLEMMER BACKSHELL

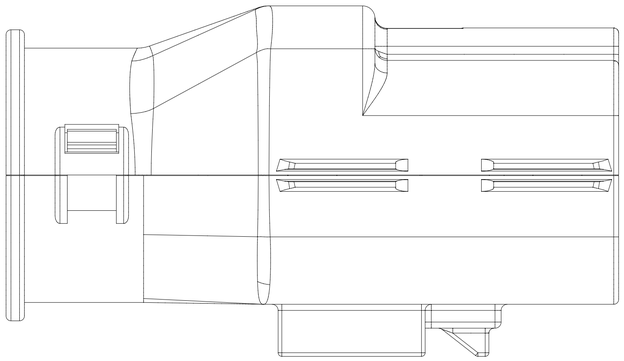

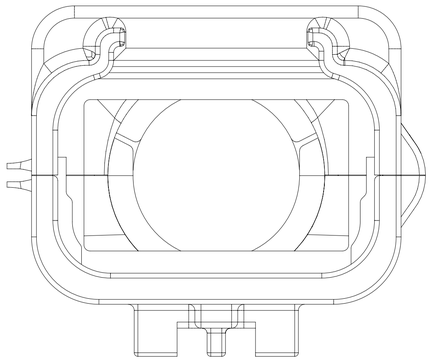

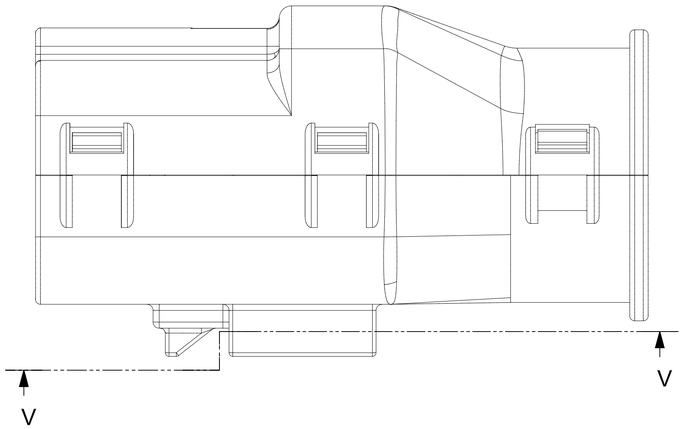

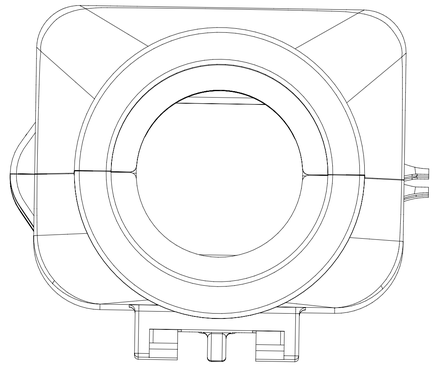

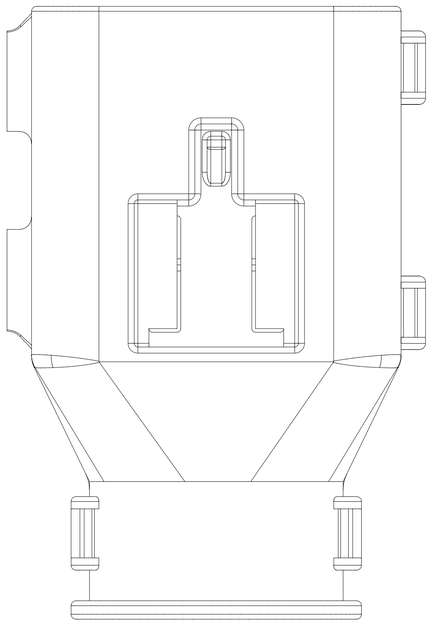

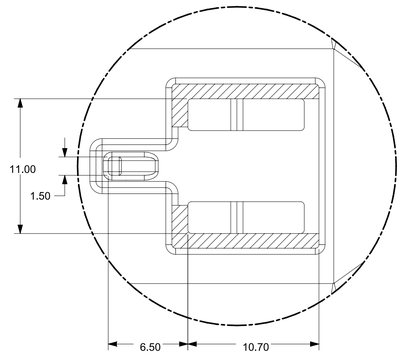

Partial V-V
SCALE 4:1

THIS DRAWING CONTAINS INFORMATION THAT IS PROPRIETARY TO MOLEX ELECTRONIC TECHNOLOGIES, LLC AND SHOULD NOT BE USED WITHOUT WRITTEN PERMISSION

FUNCTIONAL SYMBOLS	DIMENSION UNITS	SCALE
FA = 0	mm	1:1
FC = 0	GENERAL TOLERANCES (UNLESS SPECIFIED)	
FD = 0	ANGULAR TOL	± 3.0˚
	4 PLACES	±
DIVISIONAL SYMBOLS	3 PLACES	±
	2 PLACES	± 0.100
	1 PLACE	± 0.20
	0 PLACES	±
	DRAFT WHERE APPLICABLE MUST REMAIN WITHIN DIMENSIONS	

CURRENT REV DESC: SEE REVISION TABLE

PHASE:	Design Production	
CO NO:	CO-000001111	
DRWN:	Srikanth CV	2022-06-28
CHK'D:	Joe Fox	2022-08-24
APPR:	Katy Boruszewski	2022-09-01

INITIAL REVISION:

DRWN:	KBORUSZEWSKI	2014/02/19
APPR:	VKOSHY	2014/03/05

molex

MX150 GEN 2 RECEPTACLE
DUAL ROW SEALED ASSEMBLY

PRODUCT SALES DRAWING

DOCUMENT NUMBER	DOC TYPE	DOC PART	REVISION
SD-160008-0001	PSD	001	A8

THIRD ANGLE PROJECTION	DRAWING	SERIES	MATERIAL NUMBER	CUSTOMER	SHEET NUMBER
	A1-SIZE	160008		GENERAL MARKET	7 OF 11

FORMAT TC-Imperial-A
REVISION A
DATE 2015/06/11

SHEET DESCRIPTION
MOLEX BACKSHELL

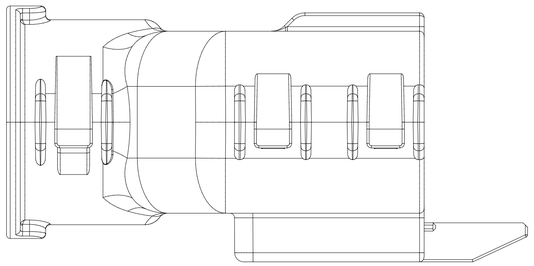

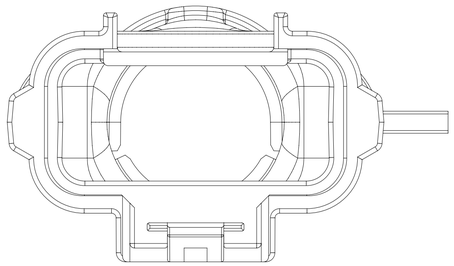

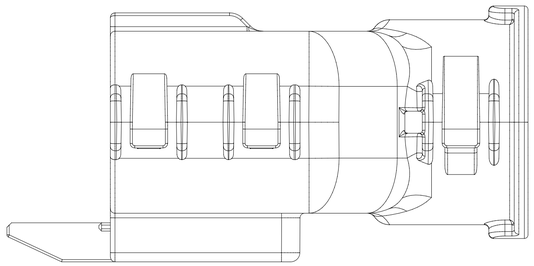

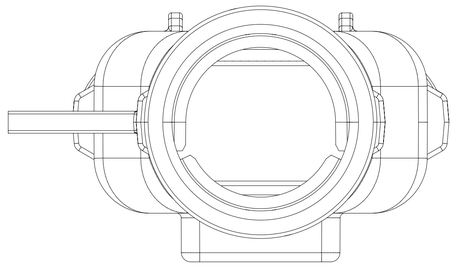

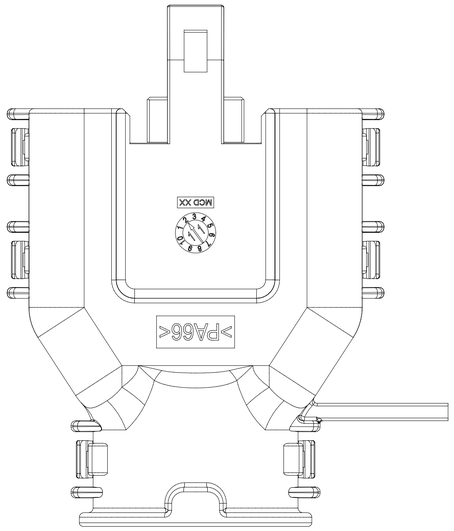

THIS DRAWING CONTAINS INFORMATION THAT IS PROPRIETARY TO MOLEX ELECTRONIC TECHNOLOGIES, LLC AND SHOULD NOT BE USED WITHOUT WRITTEN PERMISSION

FUNCTIONAL SYMBOLS	DIMENSION UNITS	SCALE
FA = 0	mm	1:1
FC = 0	GENERAL TOLERANCES (UNLESS SPECIFIED)	
FP = 0	ANGULAR TOL	± 3.0˚
DIVISIONAL SYMBOLS	4 PLACES	±
	3 PLACES	±
	2 PLACES	± 0.100
	1 PLACE	± 0.20
	0 PLACES	±
	DRAFT WHERE APPLICABLE MUST REMAIN WITHIN DIMENSIONS	

CURRENT REV DESC: SEE REVISION TABLE

PHASE:	Design Production	
CO NO:	CO-000001111	
DRWN:	Srikanth CV	2022-06-28
CHK'D:	Joe Fox	2022-08-24
APPR:	Katy Boruszewski	2022-09-01

INITIAL REVISION:

DRWN:	KBORUSZEWSKI	2014/02/19
APPR:	VKOSHY	2014/03/05

THIRD ANGLE PROJECTION

DRAWING	SERIES
A1-SIZE	160008

molex

MX150 GEN 2 RECEPTACLE
DUAL ROW SEALED ASSEMBLY

PRODUCT SALES DRAWING

DOCUMENT NUMBER	DOC TYPE	DOC PART	REVISION
SD-160008-0001	PSD	001	A8

MATERIAL NUMBER	CUSTOMER	SHEET NUMBER
	GENERAL MARKET	8 OF 11

FORMAT: 01-Engineering A
REVISION: A
DATE: 2021/04/01

SHEET DESCRIPTION
SCHLEMMER BACKSHELL CONFIGURATIONS

CHARTED DIMENSION	
DESCRIPTION	DIMENSIONS
	H
2X3 STANDARD	N/A
2X3 W/O CLIPSLOT	28.50
2X4 W/ CLIPSLOT	N/A
2X4 W/O CLIPSLOT	N/A
2X6 STANDARD	N/A
2X6 W/O CLIPSLOT	35.83

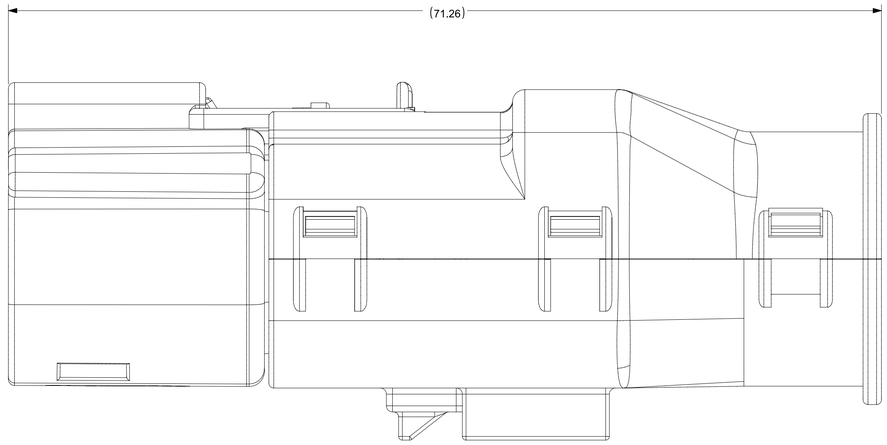

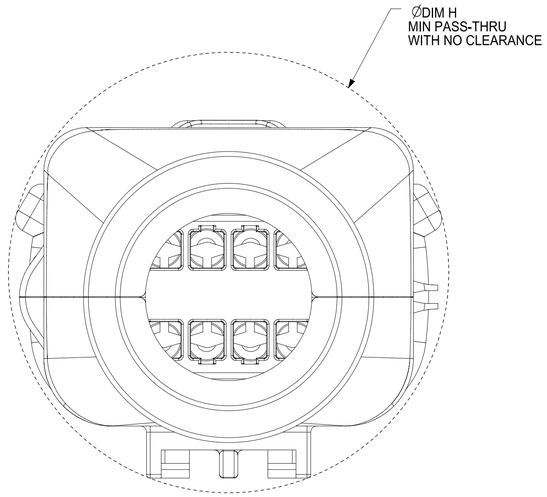

RECEPTACLE SEALED ASSEMBLY WITH RECEPTACLE BACKSHELL

THIS DRAWING CONTAINS INFORMATION THAT IS PROPRIETARY TO MOLEX ELECTRONIC TECHNOLOGIES, LLC AND SHOULD NOT BE USED WITHOUT WRITTEN PERMISSION

FUNCTIONAL SYMBOLS	DIMENSION UNITS	SCALE
F A = 0	mm	1:1
F C = 0	GENERAL TOLERANCES (UNLESS SPECIFIED)	
F D = 0	ANGULAR TOL	± 3.0°
DIVISIONAL SYMBOLS	4 PLACES	±
	3 PLACES	±
	2 PLACES	± 0.100
	1 PLACE	± 0.20
	0 PLACES	±
	DRAFT WHERE APPLICABLE MUST REMAIN WITHIN DIMENSIONS	

CURRENT REV DESC: SEE REVISION TABLE

PHASE: Design Production
CO NO: CO-000001111
DRWN: Srikanth CV 2022-06-28
CHK'D: Joe Fox 2022-08-24
APPR: Katy Boruszewski 2022-09-01

INITIAL REVISION:
DRWN: KBORUSZEWSKI 2014/02/19
APPR: VKOSHY 2014/03/05

THIRD ANGLE PROJECTION

DRAWING	SERIES
A1-SIZE	160008

molex

MX150 GEN 2 RECEPTACLE
DUAL ROW SEALED ASSEMBLY

PRODUCT SALES DRAWING

DOCUMENT NUMBER	DOC TYPE	DOC PART	REVISION
SD-160008-0001	PSD	001	A8

MATERIAL NUMBER	CUSTOMER	SHEET NUMBER
	GENERAL MARKET	9 OF 11

FORMAT: 12-Engineering A
REVISION: A
DATE: 2021/04/01

SHEET DESCRIPTION
MOLEX BACKSHELL CONFIGURATIONS

CHARTED DIMENSIONS				
DESCRIPTION	DIMENSIONS			
	J	K	L	M
2X2 W/O CLIPSLOT	TBD	TBD	TBD	TBD
2X2 W/ CLIP SLOT	TBD	TBD	TBD	TBD
2X2 LENGTHENED	TBD	TBD	TBD	TBD
2X4 W/ CLIPSLOT	58.44	32.85	32.10	44.26
2X4 W/O CLIPSLOT	N/A	N/A	N/A	N/A
2X8 W/ CLIPSLOT	67.19	42.65	36.10	56.49
2X8 W/O CLIPSLOT	N/A	N/A	N/A	N/A
2X10 W/ CLIPSLOT	67.24	42.65	36.10	56.49
2X10 W/O CLIPSLOT	N/A	N/A	N/A	N/A

RECEPTACLE SEALED ASSEMBLY WITH RECEPTACLE BACKSHELL

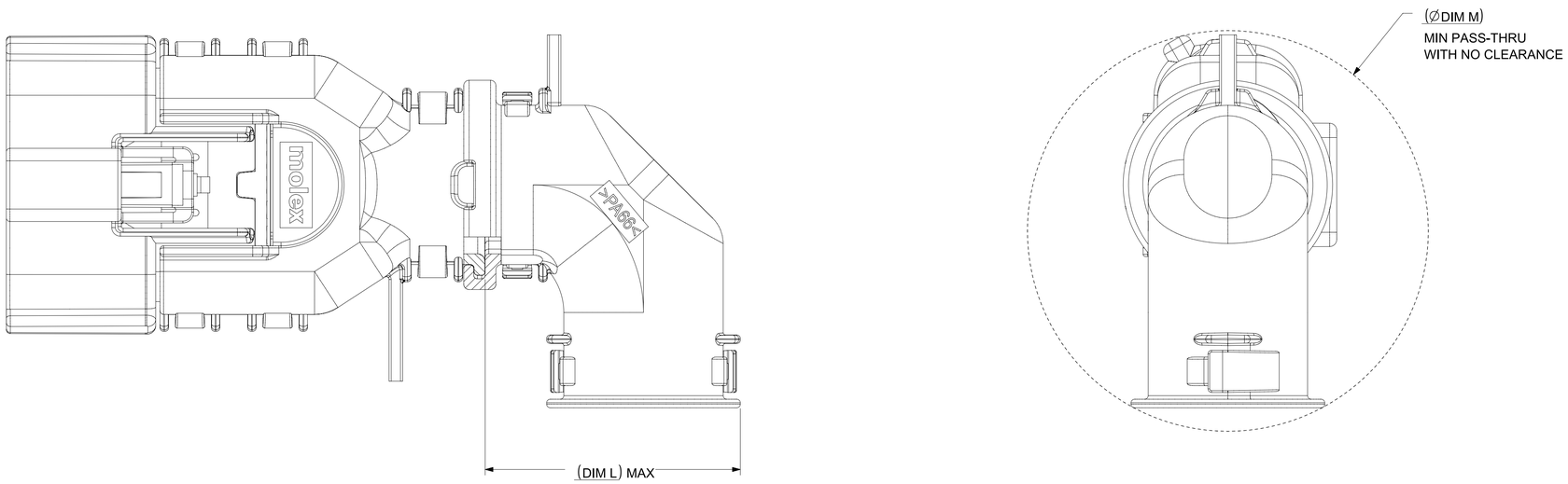

ADD THE VALUE OF 'L' TO THE TOTAL DIMENSION
FOR WHENEVER ADAPTOR IS USED

THIS DRAWING CONTAINS INFORMATION THAT IS PROPRIETARY TO MOLEX ELECTRONIC TECHNOLOGIES, LLC AND SHOULD NOT BE USED WITHOUT WRITTEN PERMISSION

FUNCTIONAL SYMBOLS
FA = 0
FC = 0
FP = 0
DIVISIONAL SYMBOLS

DIMENSION UNITS	SCALE
mm	1:1

GENERAL TOLERANCES (UNLESS SPECIFIED)	
ANGULAR TOL	± 3.0°
4 PLACES	±
3 PLACES	±
2 PLACES	± 0.100
1 PLACE	± 0.20
0 PLACES	±

DRAFT WHERE APPLICABLE MUST REMAIN WITHIN DIMENSIONS

CURRENT REV DESC: SEE REVISION TABLE

PHASE: Design Production
CO NO: CO-000001111
DRWN: Srikanth CV 2022-06-28
CHK'D: Joe Fox 2022-08-24
APPR: Katy Boruszewski 2022-09-01

INITIAL REVISION:
DRWN: KBORUSZEWSKI 2014/02/19
APPR: VKOSHY 2014/03/05

THIRD ANGLE PROJECTION

DRAWING	SERIES
A1-SIZE	160008

molex

MX150 GEN 2 RECEPTACLE
DUAL ROW SEALED ASSEMBLY

PRODUCT SALES DRAWING

DOCUMENT NUMBER	DOC TYPE	DOC PART	REVISION
SD-160008-0001	PSD	001	A8

MATERIAL NUMBER	CUSTOMER	SHEET NUMBER
	GENERAL MARKET	10 OF 11

SHEET DESCRIPTION
2X10 CONNECTOR INTERFACE DEFINITION

SEE THE FINAL SHEET ON SD-33472-0001 FOR 2X10 CONNECTOR INTERFACE DEFINITION

THIS DRAWING CONTAINS INFORMATION THAT IS PROPRIETARY TO MOLEX ELECTRONIC TECHNOLOGIES, LLC AND SHOULD NOT BE USED WITHOUT WRITTEN PERMISSION

FUNCTIONAL SYMBOLS	FA = 0, FC = 0, FP = 0
DIVISIONAL SYMBOLS	
DIMENSION UNITS	mm
SCALE	1:1
GENERAL TOLERANCES (UNLESS SPECIFIED)	
ANGULAR TOL	± 3.0°
4 PLACES	±
3 PLACES	±
2 PLACES	± 0.100
1 PLACE	± 0.20
0 PLACES	±
DRAFT WHERE APPLICABLE MUST REMAIN WITHIN DIMENSIONS	

CURRENT REV DESC: SEE REVISION TABLE

PHASE:	Design Production	
CO NO:	CO-000001111	
DRWN:	Srikanth CV	2022-06-28
CHK'D:	Joe Fox	2022-08-24
APPR:	Katy Boruszewski	2022-09-01
INITIAL REVISION:		
DRWN:	KBORUSZEWSKI	2014/02/19
APPR:	VKOSHY	2014/03/05

THIRD ANGLE PROJECTION | DRAWING: A1-SIZE | SERIES: 160008

molex

MX150 GEN 2 RECEPTACLE
DUAL ROW SEALED ASSEMBLY

PRODUCT SALES DRAWING

DOCUMENT NUMBER	DOC TYPE	DOC PART	REVISION
SD-160008-0001	PSD	001	A8

MATERIAL NUMBER | CUSTOMER: GENERAL MARKET | SHEET NUMBER: 11 OF 11

FORMAT: 10-Composite1
FILE: 0000-0000.DWG
DATE: 2021/06/21